PEBBLE GREY

Cassi - Downlight

900.50.01

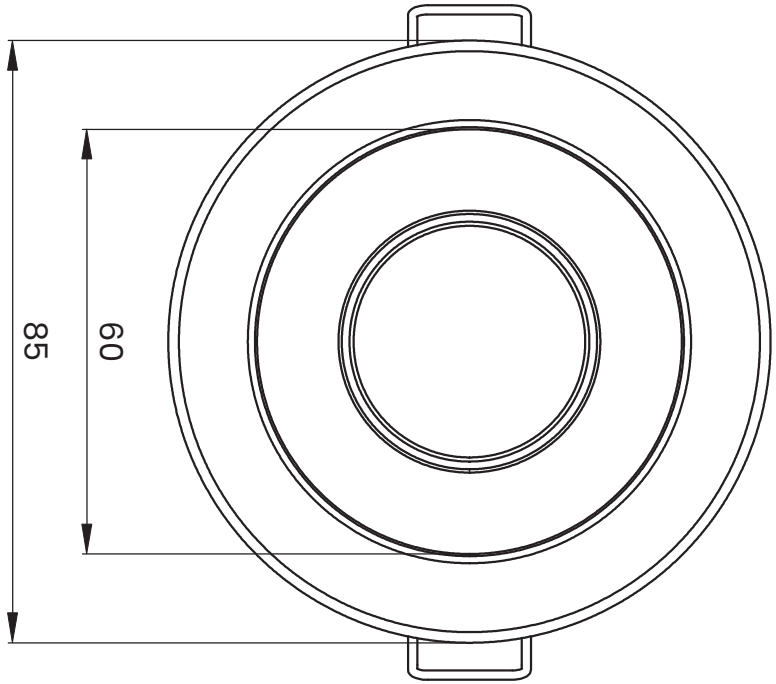

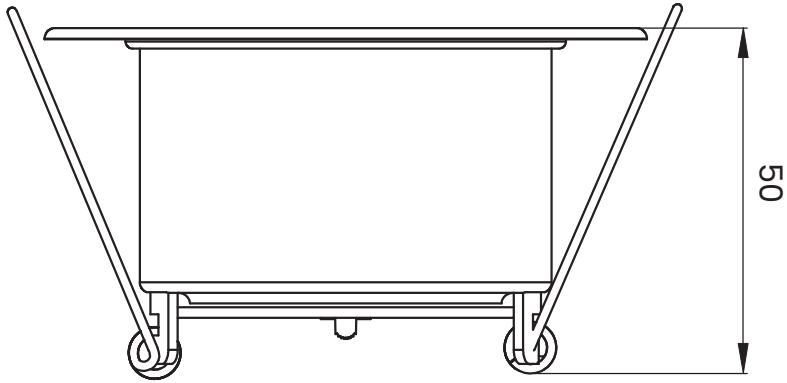

TECHNICAL SPECIFICATION

IMPORTANT INFORMATION ALL measurements in this document are set in MM (Millimetres)