PEBBLE GREY

Florence LED Mirror: 500x700mm

500.40.60

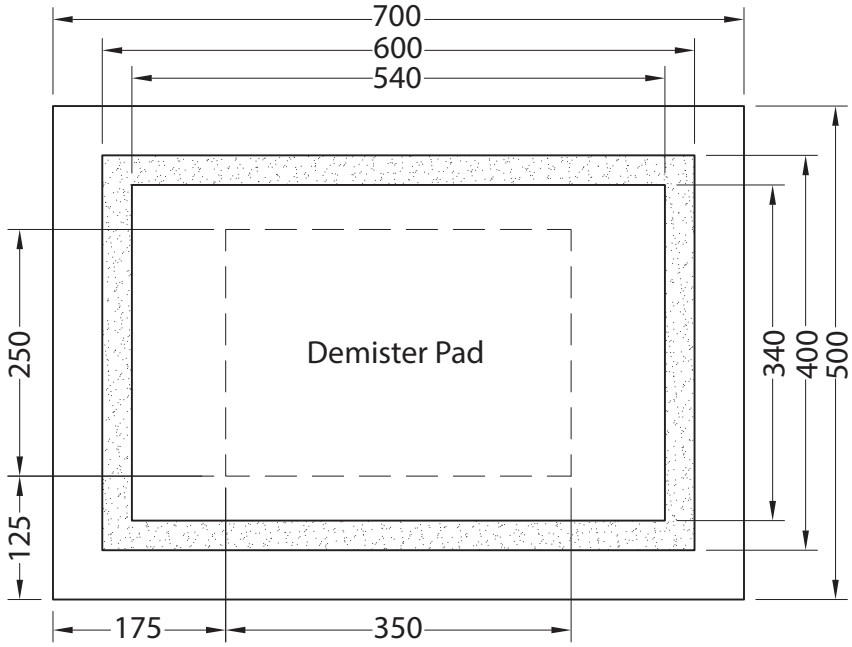

Front View

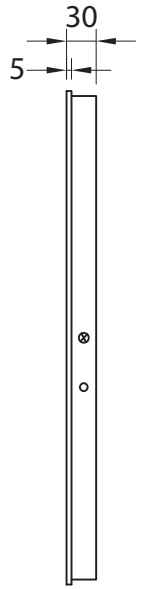

Right View

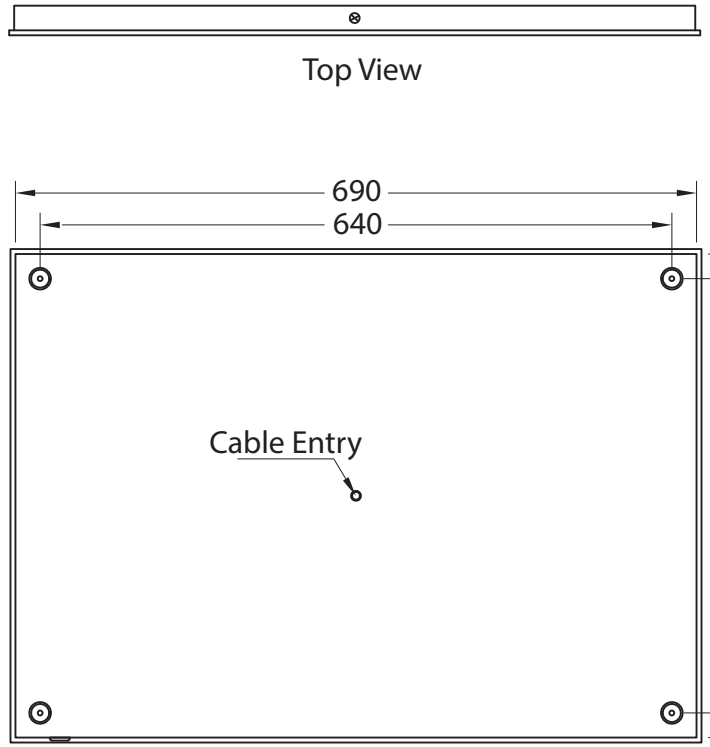

Back View

Left View

IMPORTANT INFORMATION ALL measurements in this document are set in MM (Millimetres)